M & G calibration

RK Pneumatic Deadweight Tester

ACCURACY

** Accuracy: **±(0.015% of reading*), ±(0.025% of reading*), or ±(0.05% of reading)**

Repeatability: **± 0.005% of reading**

Temperature Coefficient: **± 0.00167% of rdg / °C outside of 23°C**

* *Down to 10 inH2O.*
±(0.05% of reading) below 10 inH2O

** *See ordering information for details.*

WEIGHT MASSES

Pressure Range: **0.145 to 300 psi /1 to 2000 kPa**

Gravity: **9.80655 m/s² (Int'l standard)**
Local Gravity (Specify)

Water Column Reference: **20°C (ISA standard)**
60°F (AGA standard, specify when ordering)

Available Units: **psi, kg/cm², bar, kPa, inH_2O, cmH_2O, and inHg**

PRESSURE SOURCE

Source: **Nitrogen or instrument /shop air** ◆

Maximum Supply Pressure: **450 psi /3100 kPa**

Minimum Supply Pressure: **30 psi /210 kPa** ◆◆

Flow Rate: **1 scfh at 0.15 psi / 28 slh at 1 kPa output**
60 scfh at 300 psi / 1700 slh at 2000 kPa output

◆ *ISA quality standard 7.3.*

◆◆ *Or 150% of desired output pressure.*

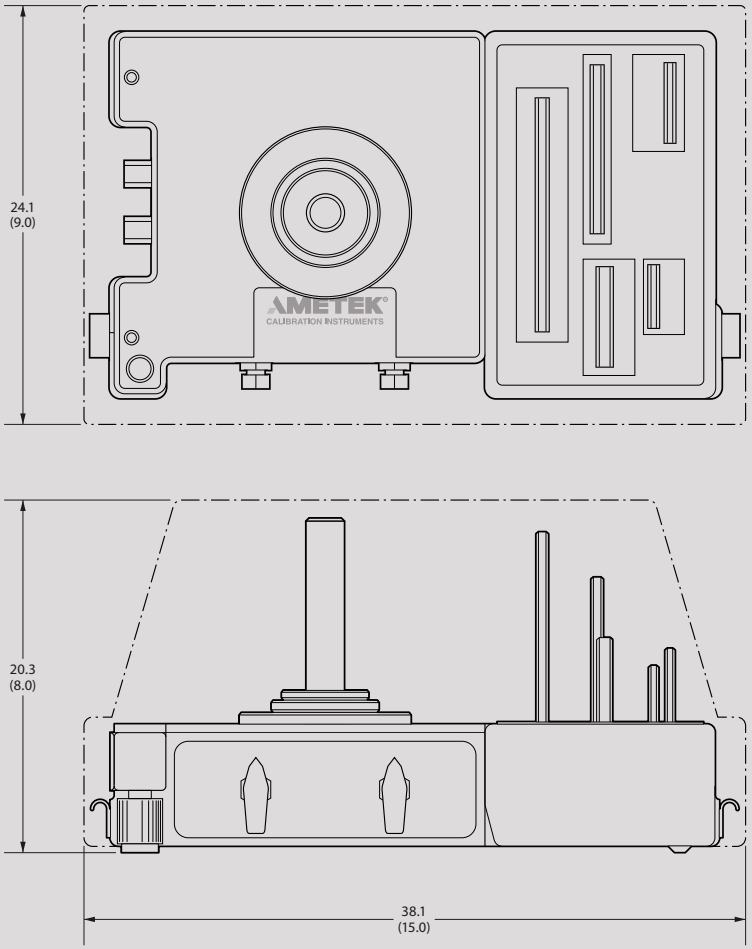

ALL DIMENSIONS IN CM (IN)

Tester Enclosure

ENCLOSURES

Tester Dimensions (L x W x H): **15 x 9 x 8 in (38.1 x 24.1 x 20.3 cm)**

Tester Weight: **18 to 31.5 lb (8.2 to 14.3 kg)**

Weights Case Dimensions (L x W x H): **12 x 8.5 x 11.5 in (30.5 x 21.6 x 29.2 cm)**

Masses: **17.5 to 61.5 lb (8 to 30 kg)**

MATERIAL AND CONNECTION

Weight Masses: **Stainless Steel (as standard)**
Aluminum (optional small incremental weights)

Ball: **Ceramic**

Connection: **1/8" Female NPT**

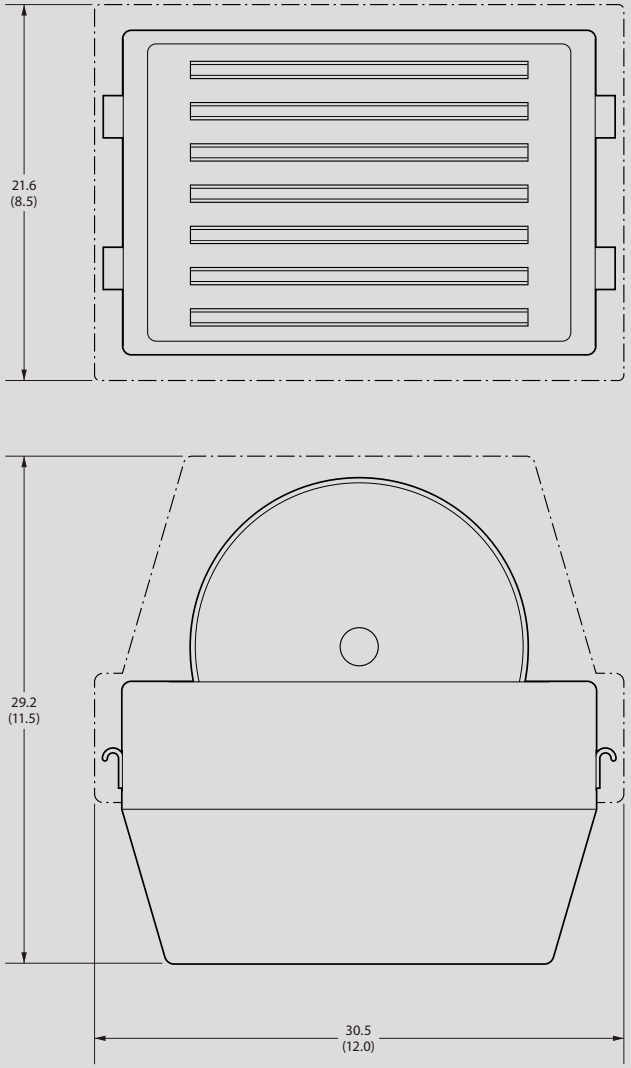

ALL DIMENSIONS IN CM (IN)

Weights Enclosure

MODELS, SPECIFICATIONS, AND OPTIONS

Model	Certified Range	Increment	Weight Carrier and Ball Output
RK-50	1 to 51 psi	1 psi	1 psi
RK-100	1 to 101 psi	1 psi	1 psi
RK-200	1 to 201 psi	1 psi	1 psi
RK-300	1 to 301 psi	1 psi	1 psi
RK-4M	0.01 to 4 kg/cm^2	0.01 kg/cm^2	0.01 kg/cm^2
RK-8M	0.01 to 8 kg/cm^2	0.01 kg/cm^2	0.01 and 0.02 kg/cm^2
RK-20M	0.01 to 20 kg/cm^2	0.01 kg/cm^2	0.01 and 0.02 kg/cm^2
RK-2B	0.01 to 2 bar	0.01 bar	0.01 bar
RK-4B	0.01 to 4 bar	0.01 bar	0.01 bar
RK-8B	0.01 to 8 bar	0.01 bar	0.01 and 0.02 bar
RK-12B	0.01 to 12 bar	0.01 bar	0.01 and 0.02 bar
RK-20B	0.01 to 20 bar	0.01 bar	0.01 and 0.02 bar
RK-200N	1 to 211 kPa	1 kPa	1 kPa
RK-400N	1 to 411 kPa	1 kPa	1 kPa
RK-800N	1 to 811 kPa	1 kPa	1 and 2 kPa
RK-1200N	1 to 1211 kPa	1 kPa	1 and 2 kPa
RK-2000N	1 to 2011 kPa	1 kPa	1 and 2 kPa
RK-100WC	4 to 104 inH_2O	1 inH_2O	4 inH_2O
RK-300WC	4 to 314 inH_2O	1 inH_2O	4 inH_2O
RK-600WC	4 to 614 inH_2O	1 inH_2O	4 inH_2O
RK-110WC	4 to 1114 inH_2O	1 inH_2O	4 inH_2O
RK-1600WC	4 to 1614 inH_2O	1 inH_2O	4 inH_2O
RK-500CM	5 to 510 cmH_2O	10 cmH_2O	10 cmH_2O
RK-1000CM	10 to 1010 cmH_2O	10 cmH_2O	10 cmH_2O
RK-2000CM	10 to 2010 cmH_2O	10 cmH_2O	10 cmH_2O
RK-3000CM	10 to 3010 cmH_2O	10 cmH_2O	10 cmH_2O
RK-4000CM	10 to 4010 cmH_2O	10 cmH_2O	10 cmH_2O
RK-100H	1 to 112 inHg	0.1 inHg	1 inHg

Calibration and Accuracy Options

(specify standard or local gravity)

Suffix	Accuracy	Data
(omit)	± (0.05% of reading)	○
/C	± (0.05% of reading)	●
-1B	± (0.025% of reading)	○
-1B/C	± (0.025% of reading)	●
-1A	± (0.015% of reading)	○
-1A/C	± (0.015% of reading)	●

○ *Standard traceable certificate.*

● *Includes effective area, nominal pressure, and actual pressure data.*

ORDERING INFORMATION

Sample Part Numbers

RK-300 ...

0.05 % of reading, 1 to 301 psi range.

RK-20B-/C ...

0.05 % of reading, 0.01 to 20 bar range, with test data.

RK-300WC-1A/C ...

0.015 % of reading, 4 to 314 inH_2O range, with test data.

STANDARD DELIVERY

- Tester base with case
- Weight Set
- Manual
- NIST Traceable Certificate

ACCESSORIES

Gauge Pointer Puller Set P/N **1GT-99**

Tripod P/N **K-1562**

Adapter to CPF Fitting Line P/N **MPF-1/8MPT**

CPF Hose P/N **MPH-1** 1 meter hose
(additional sizes and custom lengths available)

Small Incremental Weights in psi, bar, kPa, kg/cm2, inH20, and cmH20

RWS-.1WC Aluminum weight set, converts 1 inH_2O units to 0.1 inH_2O increments

RWS-.1 Aluminum weight set, converts 1 psi units to 0.1 psi increments

RWS-.1KPA Aluminum weight set, converts 1 kPa units to 0.1 kPa increments

RWS-.1CM Aluminum weight set, converts 10 cmH_2O units to 1 cmH_2O increments

RWS-.001B Aluminum weight set, converts 0.01 bar units to 0.001 bar increments

RWS-.001M Aluminum weight set, converts 0.1 kg/cm^2 units to 0.001 kg/cm^2 increments

COMPLEMENTARY PRODUCTS

AMETEK offers a wide range of products that work with the RK:

- Fittings that connect without tools, safely and without leads
- Lightweight, super flexible high pressure hose
- Digital Test Gauge
- Reference Recorder
- Pressure Calibrator

© 2015 AMETEK Incorporated 8600 Somerset Drive, Largo, Florida 33773